MEDALIST

SINGLE ACTION FLY REEL

1492 1492½
1494 1494½
1495 1495½
1498

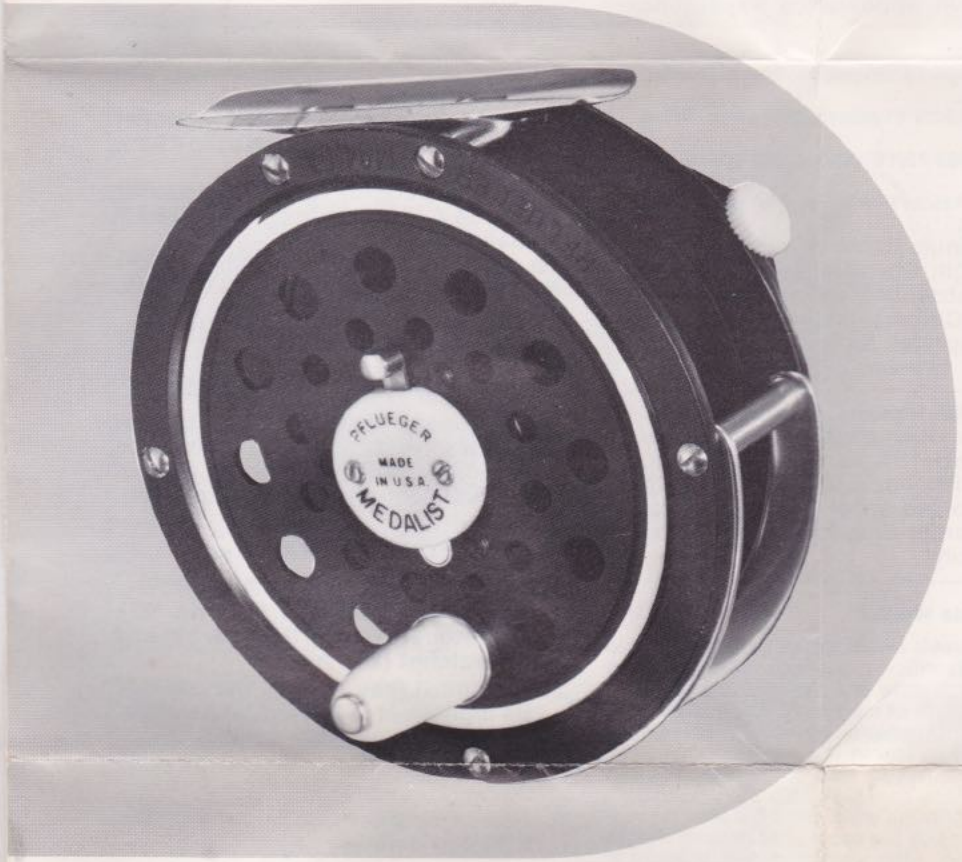

Operation
Safety
Maintenance
Service

Read Rules for Safe Operation and Instructions Carefully

PFLUEGER®

SPORTING GOODS DIVISION
SALES OFFICE
P.O. BOX 185, COLUMBIA, S.C. 29202

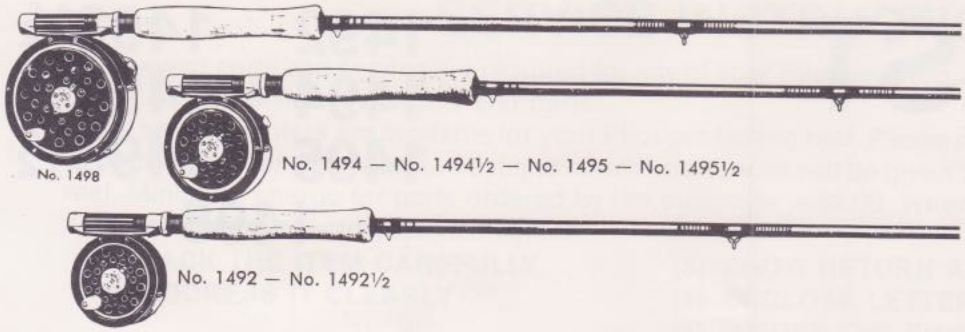

No. 1498

No. 1494 — No. 1494½ — No. 1495 — No. 1495½

No. 1492 — No. 1492½

PFLUEGER MEDALIST FEATURES

Whether trout fishing in the Rogue, Neversink, Beaverkill, or Au Sable Rivers — or tarpon fishing in the Keys, one is bound to see the Pfluger Medalist in action. The reason — it's the best. A lightweight single-action fly reel — with a style and size for every type of fly fishing.

Pflueger patented drag, long wearing and smooth acting, WORKS ONLY WHEN THE LINE IS GOING OUT. There is no drag to overcome when retrieving. Quick Take-Apart makes changing lines or cleaning really easy. Merely press a button, and the spool comes out. Anglers can change to another size line in seconds. Extra spools are available for this purpose.

Adjustable Drag

In reels Nos. 1494-1498 there is a constant drag while line is paying out, accompanied by a light click. Drag tension is adjustable by means of adjusting screw (18) on front edge of reel while fish is being played. Drag operates only while line is going out — in retrieving line, spool is perfectly free, with a very light sounding click. No. 1498 has line shedding guard over brake adjustment screw.

Dual Clicks

The Nos. 1492-1492½ have a click mechanism which serves as a drag. It is comprised of two clicks, one light and one fairly strong. Either or both clicks can be engaged at the same time, affording the desired degree of tension on spool. (To disengage click, remove spool and turn click tongue so that the short point is toward axle. To engage click, reverse this operation.)

Line Guard

Made of stainless steel which is rustproof and wears better than agate or any other stone. It prevents the line from rubbing the side plate, a safeguard against line damage.

No. 1492 13/16″ pillars, 2⅞″ plate. Wt. 4 oz.
No. 1492½ 1″ pillars, 2⅞″ plate. Wt. 4½ oz.
Smaller size model where less line capacity is required. Like 1494, etc., in appearance except no drag.

No. 1494 13/16″ pillars, 3¼″ plate. Wt. 5¼ oz.
No. 1494½ 1″ pillars, 3¼″ plate. Wt. 6 oz.
No. 1495 13/16″ pillars, 3⅝″ plate. Wt. 6 oz.
No. 1495½ 1″ pillars, 3⅝″ plate. Wt. 6¾ oz.
Aluminum frame — reinforced for strength. Stainless steel line guide that absolutely will not harm the line. Chrome plated pillars and crossplate. Satin black finish. Quiet, two-way click.

No. 1498 1″ pillars, 4″ plate. Wt. 8 oz.
Heavy duty model specially designed for tarpon, salmon, bonefish, etc. Large line capacity. Reinforced spool and back plate, and larger drag for extra braking capacity.

Adjustable Weight

Medalist reels are made as light as possible without sacrificing strength. This new and exclusive feature enables the angler to increase weight of the reel to balance the rod, if desired. Directions: Remove spool release cover (26) by taking out the two screws (1). Be careful not to lose the spring (2) and spool release cam (25). This will disclose an opening through which lead BB shot may be inserted inside the spool until desired weight is obtained. After weighting reel, if spool is not entirely full of shot, wad full with a heavy string or cotton to prevent rattling. Replace cover as before.

GIVE YOUR REEL PROPER CARE

It is essential that any fishing reel be oiled and greased well before being used (especially a new one) and often when fishing. We advise that this reel be oiled completely at lease once a day. Try all screws at intervals to insure that they are firmly in place. When fishing in fresh and salt waters containing corrosive elements, a good practice is to remove all line from the spool, after which clean all parts carefully inside and out and finally wipe with a soft rag and Pflueger Speede Reel Oil before storing reel.

Medalist Extra Spools

Every fly fisherman should have an extra spool for his Medalist reel. Keep an extra line on this spool for easy and quick conversion.

No. 496X Spool for No. 1492 Medalist
No. 493X Spool for No. 1492½ Medalist
No. 497X Spool for No. 1494 Medalist
No. 494X Spool for No. 1494½ Medalist
No. 498X Spool for No. 1495 Medalist
No. 495X Spool for No. 1495½ Medalist
No. 499X Spool for No. 1498 Medalist

Conversion to Left Hand

Any Pflueger Medalist reel, except Model No. 1492 and 1492½, may be changed to a left hand model without the necessity of purchasing extra parts.

To do this:

1. **Loosen brake and remove spool.**
2. **Remove two screws (key no. 23), the ratchet bearing (key no. 12) and the ratchet (key no. 22).**
3. **Turn pawl (key no. 21) 180° so that its high point is toward brake shoe.**
4. **Reassemble ratchet upside down, that is, with the side having eight notches upward.**
5. **Replace bronze bearing and fasten with two screws.**
6. **Remove line guard (key nos. 9 and 11) and pillar (key no. 10) and move line guard to opposite side of reel.**

MAXIMUM LINE SIZES FOR MEDALIST FLY REELS

LINE:	1492	1492½	1494	1494½	1495	1495½	1498
LEVEL	5	6	8	9	9	9	9
DOUBLE TAPER	4	5	6	7	8	9	10
WEIGHT FORWARD	5	8	9	10	11	11	11

AFTMA FLY LINE STANDARDS (WEIGHT IN GRAINS — FIRST THIRTY FEET)

CODE	4	5	6	7	8	9	10	11
WEIGHT	120	140	160	185	210	240	280	330

PFLUEGER MEDALIST

PARTS BREAKDOWN

1492, 1492½

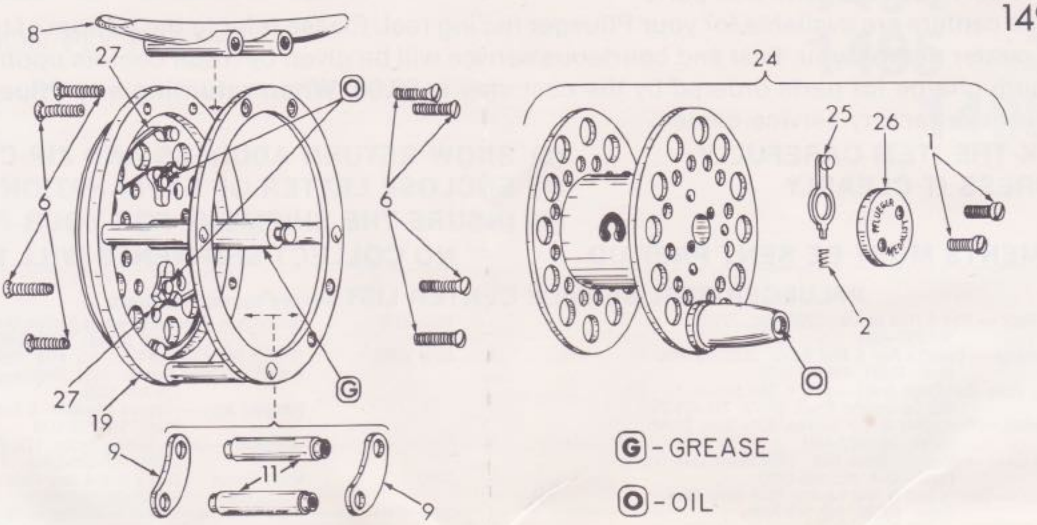

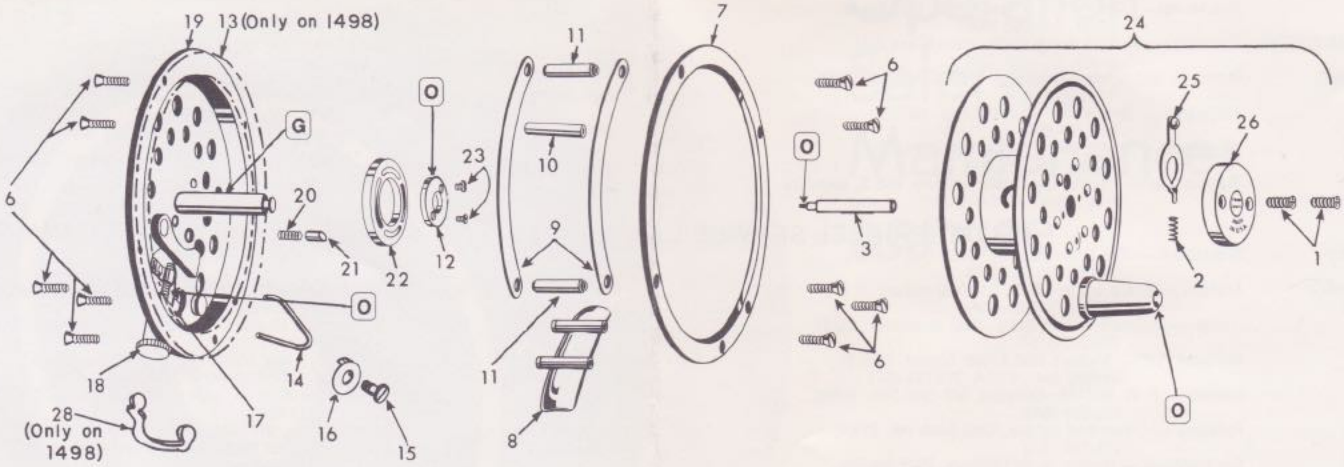

1494, 1494½, 1495, 1495½, 1498

KEY NO.	MODEL 1492	MODEL 1492½	MODEL 1494	MODEL 1494½	MODEL 1495	MODEL 1495½	MODEL 1498	PART NAME
1	74-58-0004-02	74-58-0004-02	74-58-0004-02	74-58-0004-02	74-58-0004-02	74-58-0004-02	74-58-0004-02	Screw
2	74-67-0004-01	74-67-0004-01	74-67-0004-01	74-67-0004-01	74-67-0004-01	74-67-0004-01	74-67-0004-01	Spring
3			75-09-0021-01	75-09-0022-01	75-09-0021-01	75-09-0022-01	75-09-0023-01	Spool Bushing
6	74-58-0015-01	74-58-0015-01	74-58-0015-01	74-58-0015-01	74-58-0015-01	74-58-0015-01	74-58-0015-01	Screw
7			74-47-0003-02	74-47-0003-03	74-47-0006-02	74-47-0006-03	74-47-0004-02	Front Plate
8	75-56-0003-02	75-56-0003-03	75-56-0003-02	75-56-0003-03	75-56-0003-02	75-56-0003-03	75-56-0003-03	Rod Clip
9	74-47-0005-01	74-47-0005-01	74-47-0011-01	74-47-0011-01	74-47-0010-01	74-47-0010-01	74-47-0009-01	Line Guard
10			74-44-0020-01	74-44-0021-01	74-44-0020-01	74-44-0021-01	74-44-0021-01	Frame Pillar
11	74-44-0018-01	74-44-0016-01	74-44-0018-01	74-44-0016-01	74-44-0018-01	74-44-0016-01	74-44-0016-01	Line Guard Pillar
12			74-04-0003-01	74-04-0003-01	74-04-0003-01	74-04-0003-01	74-04-0003-01	Ratchet Bearing
13							74-54-0012-01	Back Plate Ring
14			74-67-0007-01	74-67-0007-01	74-67-0009-01	74-67-0009-01	74-67-0008-01	Brake Spring
15			74-58-0009-01	74-58-0009-01	74-58-0009-01	74-58-0009-01	74-58-0009-01	Screw
16					74-33-0001-01	74-33-0001-01	74-33-0001-01	Spring Holder
17			74-11-0003-01	74-11-0003-01	74-11-0003-01	74-11-0003-01	74-11-0003-01	Spring Cam
18			75-58-0012-01	75-58-0012-01	75-58-0013-01	75-58-0013-01	75-58-0013-01	Brake Adj. Screw
19	75-47-0012-01	75-47-0057-01	75-47-0013-06	75-47-0013-07	75-47-0014-08	75-47-0014-09	75-47-0015-03	Back Plate Assy
20			74-67-0006-01	74-67-0006-01	74-67-0006-01	74-67-0006-01	74-67-0006-01	Click Pawl Spring
21			74-43-0001-02	74-43-0001-02	74-43-0001-02	74-43-0001-02	74-43-0001-02	Click Pawl
22			74-50-0004-01	74-50-0004-01	74-50-0004-01	74-50-0004-01	74-50-0004-01	Ratchet
23			74-58-0008-01	74-58-0008-01	74-58-0008-01	74-58-0008-01	74-58-0008-01	Screw
24	75-66-0007-01	75-66-0025-02	75-66-0008-01	75-66-0009-01	75-66-0010-01	75-66-0011-01	75-66-0012-01	Spool Assembly
25	75-11-0001-01	75-11-0001-01	75-11-0001-01	75-11-0001-01	75-11-0001-01	75-11-0001-01	75-11-0001-01	Cam
26	74-19-0006-01	74-19-0006-01	74-19-0006-01	74-19-0006-01	74-19-0006-01	74-19-0006-01	74-19-0006-01	Cover
27	74-67-0012-01	74-67-0012-01						Click Spring
28							74-30-0005-01	Guard

SAFETY: Major and minor accidents can occur at any time. Observe safe boating and fishing principles for utmost enjoyment of your fishing day.

SERVICE INSTRUCTIONS

In the event parts and service are required for any of your Pflueger products, please use the following guide to obtain faster service for repairs and parts.

Local service centers are available for your Pflueger fishing reel. Please refer to the bottom of this page for the authorized center nearest you. Fast and courteous service will be given by these centers upon receipt of your reel. Minimum charge for parts ordered by the customer is $2.00. **When returning any Pflueger reel to the service center** or factory service center:

(1) PACK THE ITEM CAREFULLY
(2) ADDRESS IT CLEARLY
(3) SHOW RETURN ADDRESS AND ZIP CODE
(4) ENCLOSE LETTER OF EXPLANATION
(5) INSURE THE SHIPMENT FOR YOUR PROTECTION

ALL SHIPMENTS MUST BE SENT PREPAID **NO COLLECT SHIPMENTS WILL BE ACCEPTED**

PFLUEGER REEL SERVICE CENTER LIST Including Warranty Adjustments

ARKANSAS	Little Rock — Rod & Reel of Ark., 2202 Watt, 72207, 501/227-7505
CALIFORNIA	Sacramento — Ewoldt's Rod & Reel Repair, 3089 Del Paso Blvd., 95815, 916/927-2767
	Spring Valley (San Diego Area) — B & R Reel Service, 405 Sweetwater Road, 92077, 714/479-2011
FLORIDA	Hollywood — Paul's Rod & Reel Service, 2015 Grant Street, 33020, 305/922-4171
	Miami Lakes — Southern Tackle Dist., 5800 Miami Lake Drive, East, 33014, 305/558-5800
ILLINOIS	Chicago — Coren's Rod & Reel Service, 6619 North Clark Street, 60626, 312/743-2980
	Chicago Heights — E & R Reel Repair, 865 Victoria Circle 60411, 312/758-1406
INDIANA	Merrillville — Grillo's Rod & Reel Repair, 704 West 67th Avenue, 46410, 219/769-6597
IOWA	Des Moines — Glenn's Rod & Reel Repair, 1735 Searle, 50317, 515/262-2990
MASSACHUSETTS	Newberry — Surfland Bait & Tackle, Plum Island Blvd., 01950, 617/462-4202
MICHIGAN	Detroit — Aco Sportsman Service, 13501 Van Dyke, 48234, 313/365-4610
	Kalamazoo — Service Rite, 1707 Melerest, 49007, 616/349-8904
	Muskegon — Springs Bait & Tackle, 280 Ottawa St. 49440, 616/726-3418
	Traverse City — Traverse Bay Tackle Company, 848 S. Memorial Hwy., 49684, 616/946-3411
MISSOURI	Bridgeton — Reutner's Factory Service Center, 3250 McKelvey Road, 63044, 314/739-6099
NEW YORK	Baldwin Place — Bob Gray, Box 4118, 10505, 914/628-7516
	Buffalo — United Surplus, 1033, Broadway, 14212, 716/895-3328
	Hampton Bays — Charles Altenkirch & Son, Inc., Box 779, 11946, 516/728-4110
	Rochester — Jay-Ve Fishing Tackle, 473, Portland Avenue, 14605, 716/325-5093
OHIO	North Canton — Dave's Rod & Reel Repair, 805 North Main, 44720, 216/499-4386
OKLAHOMA	Tulsa — Okiebug Rod & Reel Company, 3501 South Sheridan, 74145, 918/664-1026
OREGON	Portland — Ollie Damon Inc., 4530 S. E. Hawthorne Blvd., 97215, 503/232-3193
PENNSYLVANIA	Ephrata — Woodbee Rod & Reel, 21 Cloister Ave., 17522, 717/733-0031
TEXAS	Corpus Christi — Corpus Chirsti — Rod & Reel, 6109 McArdle, 78412, 512/991-0352
	Pasadena — McDowell's Sporting Goods, 1916 Strawberry, 77502, 713/472-5934
WISCONSIN	West Allis — Easterling's Reel & Rod Repair, 1926 South 59th., 53219, 414/541-7530
CANADA	Edmonton — Specialty Repairs, 10160-101st Street, Alberta, T5J 0T1, 403/422-2064

PFLUEGER REEL SERVICE CENTER LIST Excluding Warranty Adjustments

ALABAMA	Birmingham — The Tackle Box, Inc. 8427 First Avenue, 35206, 205/833-9311
CALIFORNIA	Anaheim — Fish'n Tackle, 1202½ South Brookhurst St., 92804, 714/533-3720
	Fresno — Tommel's Fishing Tackle, 1027 Blackstone, 93701, 209/266-5537
	Monterey Park — Mickey's Rod & Reel Service, 2418 S. Garfield Ave., 91754, 213/724-3672
	Oakland — P. W. McClintic Company, 608 EAst 20th, 94606, 415/834-9819
	Pasadena — Crown Reel Service, 1353 North Hill, 91104, 213/798-7979
	San Francisco — Modern Tackle Company, 2975 Mission Street, 94110
COLORADO	Denver — Dave Cook Sporting Goods, 1601 Larimer Street, 80202, 303/892-1929
	Wheatridge — Obie's Reel Service, P.O. Box 536, 80033, 303/237-6457
DELAWARE	Wilmington — Pouser's Rod & Reel Service, 115 Belmont Avenue, 19804, 302/654-7853
FLORIDA	Duck Key — Duck Key Marina, Inc., Route 1, Box 1149, 33050, 305/289-0161
	Ft. Pierce — Ray F. Van Seggern, 9309 S. Indian River Dr., 33450, 305/461-2772
	Jacksonville — Crady's Tackle Box, 8019 Main Street, 32208, 904/764-8255
	Marathon — Hall's Bait & Tackle, 1688 Overseas Hwy., 33050, 305/743-9474
	St. Petersburg — Betts Spoting Goods, P.O. Box 40148, 33743, 813/391-5127
ILLINOIS	Moline — Trevillyan's Reel Repair, 1914-16th, Uptown, 61265, 309/764-3002
	Oaklawn — Riecke's Bait & Tackle, 6838 West 95th., 60453, 312/598-8729
	Peoria — Southside Worm Ranch, 3405 South Adams, 61605, 309/637-5063
	Waukeegan —The Coho Shop, 622 Grand, 60085, 312/623-4570
INDIANA	Anderson — Killbuck Valley Sports, 8113 South Main Street, 46011, 317/649-0141
	Monticello — Riverside Tackle Shop, RR o5, Box 227, 47960, 219/965-2882
	Moorsville — Tackle Service Center, 135 West High, 46158, 317/831-2400
KANSAS	Wichita — Ray's Rod & Reel Repair, 414 Pattie, 67211, 316/267-9462
	Valley Center — Valley Rod & Reel Center, 411 Birch, 67147, 316/755-1993
KENTUCKY	Louisville — Doerr's Reel Repair, 1515 Bardstown, 40205, 502/451-7327
	Owensboro — Mahlinger's Sporting Goods, 225 West Second Street, 42302, 502/683-3827
LOUISIANA	Baton Rouge — Favaro's Rod & Reel Repair, 3003 Weller Avenue, 70805, 504/355-4368
	Bossier City — Ark-La-Tex, 1870 Airline Dr., 71010, 318/746-8701
	New Orleans — Professional Sport Shop, 920 Perdido St., 70112, 504/522-3771
MAINE	Houlton — Brown's Trading Post, Ludlow Road, 04730, 207/532-2534
MICHIGAN	Flint — Bob's Bait Shop, 64205 Fenton Rd., 48507 313/639-6373
	Grosse Point Woods — A & A Reel Repair, 21006 Mack Avenue, 48236, 313/884-7388
MINNESOTA	Minneapolis — Warner's Hardware, 13 South 6th Street, 55402, 612/333-4111
MISSOURI	Kansas City — Comby's Rod & Reel Repair, 2407 Blue Ridge Blvd., 64129, 816/252-3698
	St. Louis — Paul's Bait & Tackle, 4421 Chippewa Street, 63116, 314/773-6221
MONTANA	Butte — Lucky Bug Shop, 917 Utah, 59701, 406/792-3028
NEW JERSEY	Perth Amboy — Rudy's Reel Repair Shop, % Fishkin Bros., 285 Madison Ave., 08861, 201/442-0991
NEW MEXICO	Albuquerque — H. Cook Sporting Goods, 308 Central S.W., 87102, 505/243-3725
NEW YORK	Syracuse — Sportsman Repair Shop, 448 James, 13203, 315/422-2056
	Waterloo — Fishermen's Friend, 695 Waterloo Geneva Rd., 13165, 315/539-3847
OHIO	Akron — Clarkin's Sporting Goods, 3200 Arlington, 44312, 216/644-8813
	Canal Winchester — Maddy Tackle Repair, 53 Columbus Street, 43110, 614/837-7224
	Brook Park — Dick's Tackle Shop, 5632 Smith, 44142, 216/267-0875
	Toledo — A & R Tackle Repair, 824 Lodge, 43609, 419/382-7102
OKLAHOMA	Lawton — Frank's Reel & Rod Service, 1003 "E" Ave., 73501, 405/248-2647
	Tulsa — Pitt's Reel Repair, 124 N. College, 74110, 918/936-5070
PENNSYLVANIA	Lancaster — Chester L. Myer's, 711 Emerald Drive, 17603, 717/394-8023
	Philadelphia — John Schmitt Sport Center, 2962, Kensington, 19134, 215/426-8481
	Reading — Bill's Bait & Tackle, 1401 North 10th., 19604, 215/372-0388
TEXAS	Dallas — Irby Wright Sporting Goods, 616 Schooldell, 75211, 214/339-5517
	Dallas — Sportsman's Elect., 10875 Shady Trail, Suite 102, 75220, 218/357-8154
	Galveston — Aramco Treasure Island Spt. Gds., 5105 Broadway, P.O. Box R, 77522, 713/762-4888
	LaMarque — Dick's Tackle Repair, 260 Industrial Street, 77568, 713/935-5630
	Lubbock — C & B Tackle Repair, 3623 58th Street, 79413, 806/799-7800
	Lufkin — Roland's Tackle Shop Inc., 4403 Medford, 75901 713/632-5772
WASHINGTON	Seattle — Seattle Sporting Goods, 4740 Roosevelt Way, N.E., 98105, 206/447-6120
	Seattle — Tashiro's Hardware, 109-13 Prefontaine Place, 98104, 206/622-8452
	Tacoma — Tacoma Rod & Reel Repair, 13001 Pacific Avenue, 98444, 206/537-6665
WISCONSIN	Madison — Bob's Reel Repair & Sporting Goods, 1370 Williamson St., 53703, 608/249-9392
	Spooner — Spooner Reel Service, Box 72, 54801, 715/635-8102
CANADA	Winnipeg — Market Sales Sporting Goods, 605 Main Street, Manitoba, R3B 1C8, 204/943-9510

74-36-8591-05

Pflueger Reel Service Department, Hwy. 71 South, Fayetteville, Ark. 72701

Printed in U.S.A.